Freescale Development Tools

CodeWarrior™ MPC8343E QUICCstart Evaluation System

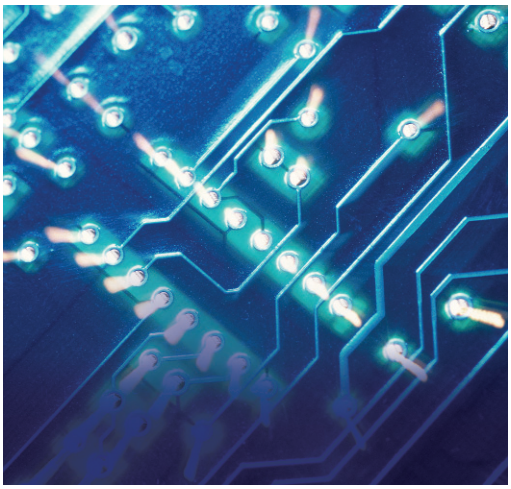

Overview

With the MPC8343E QUICCstart Evaluation System you are getting a cost-effective, high-performance platform for developing advanced network enabled applications. As part of the PowerQUICC II Pro Family, The MPC8343E is designed to provide a cost-effective, highly integrated control processing solution that addresses the emerging needs of networking, communications and pervasive computing applications. MPC8343E processor can be used in applications such as Ethernet routers and switches, wireless LAN (WLAN) equipment, network storage, home network appliances, industrial control equipment, and copiers, printers and other imaging systems.

The MPC8343E's heart is its e300 PowerPC core. This core is an enhanced version of the 603e PowerPC core used in previous-generation PowerQUICC II processors, and it contains twice as much L1 cache (32 KB data cache and 32 KB instruction cache) along with integrated parity checking and other performance-enhancing features. The e300 core is completely software-compatible with existing 603e core-based products. This architecture improves system performance, simplifies board design, lowers power consumption, and reduces cost. The MPC8343E features a powerful, integrated security engine which supports DES, 3DES, MD-5, SHA-1, AES, and ARC-4 encryption algorithms, as well as a public key accelerator and an on-chip random number generator.

This system comes in a PrPMC/PT0MC board which has been designed for ease of integration into standards-based CompactPCI systems, though for less complex development, it can also be used in a stand alone mode when desired. With the included CodeWarrior software tools and pre-installed Linux board support package, you can focus on your application development and getting to market rapidly.

QUICCstart Evaluation Systems come complete with the processor board, power supply, CodeWarrior USB TAP run control device, cables, and evaluation copies of CodeWarrior Development Studio Communications Processors Edition and Linux Platform & Application Editions for PowerPC. A Linux board support package is also supplied on CD and is flashed to the board. This evaluation system has been packaged and documented so that you can be productive within 30 minutes of unpacking the kit.

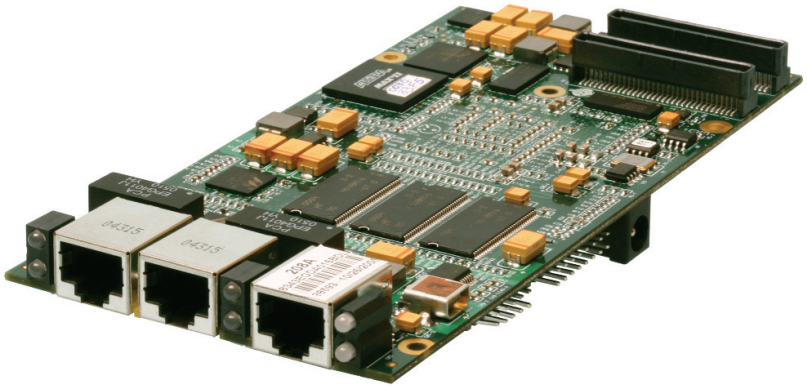

freescale™ semiconductor

CodeWarrior MPC8343E QUICCstart Evaluation System

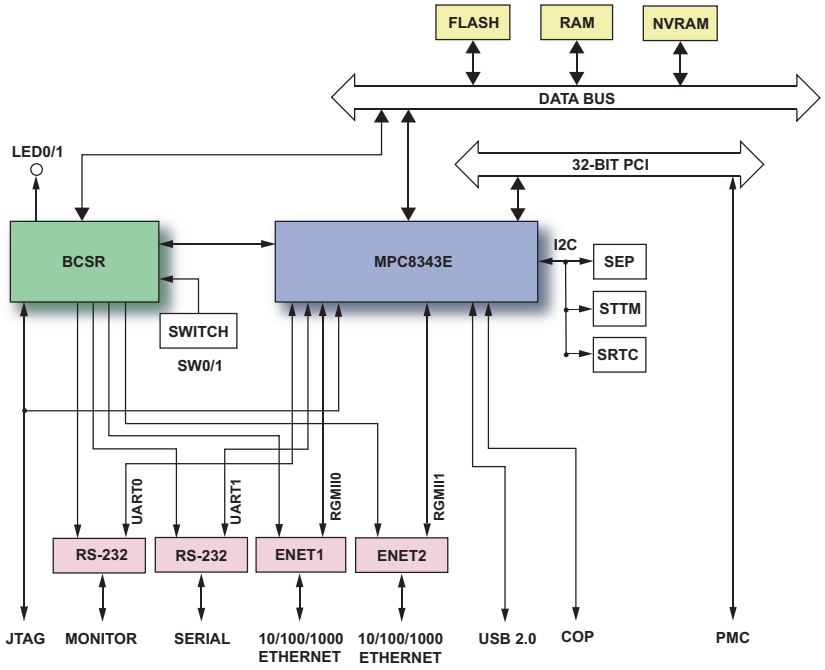

Benefits:

CodeWarrior Tools Integration: a trial copy of Freescale's own CodeWarrior development tools provides a single development environment that includes CodeWarrior compilers, high-performance hardware debug capability via the included USB TAP with support for conditional breakpoints, data watchpoints and expression evaluation, a comprehensive Project Manager and Build System with an easy-to-use GUI and graphical flash memory programming capability.

Free Schematics: a PDF of this board's schematics are available. These schematics can give an engineer a solid starting point when considering the use of this processor in their own boards.

Experienced Support: as a supplier of evaluation systems, reference designs and hardware-assisted debugging tools for an array of microprocessors, Freescale has the experience necessary to provide knowledgeable, responsive application and technical support for development projects.

Linux Board Support Package: Freescale provides the source code for a board support package available for use with our Linux Platform Edition product. Developers can fully utilize and modify the source code for current and future projects.

Accelerated Early Development: firmware, hardware and production test engineers can each take advantage of Freescale evaluation systems and reference designs. Firmware and hardware engineers can adapt Freescale evaluation systems to their own, enabling them to reduce development time. Production test engineers can use the board and included CodeWarrior Tools and USB TAP to design and prototype complex and efficient production algorithms before the custom hardware is prototyped.

Features:

> Processor: Freescale MPC8343E PowerQUICC II Pro PowerPC at 400MHz

> Evaluation copies of CodeWarrior Development Studio Communications Processors Edition and Linux Platform & Application Editions for PowerPC

> Free PDF schematic

> Experienced Freescale support

> Linux board support package

> 64MB DDR RAM

> 16MB Flash

> Two 10/100/1000BaseT Ethernet

> Two RS-232 serial ports

> 32-bit, 33/66MHz PCI 2.2 bus

> Expansion: PCI bus via PrPMC connectors

> USB 2.0 Host/Device/On-The-Go

> I2C Devices: EEPROM, RTC, Temperature Sensor

> 5.25 to 3.0 VDC single power supply source

> Form Factor:PrPMC/PT0MC (PICMG 2.15, Configuration 0)

> Debug: COP/JTAG

> Can operate as Stand Alone module or PrPMC/PT1MC monarch or non-monarch

> Dipswitch 4-position slide switch

> BCSR Control and Status Registers

> Operating Range: 0° C to 70° C

Ordering Info:

Part # CWH-PPC-8343N-VX

Learn More: For more information about Freescale products, please visit **www.freescale.com/codewarrior**

FREESCALE and the FREESCALE logo are trademarks of Freescale Semiconductor, Inc. All other product or service names are the property of their respective owners.
© Freescale Semiconductor, Inc. 2006.
ALL RIGHTS RESERVED.

950-00143
REV A

freescale™ semiconductor